FLAT SQ8 DATA SHEET

Hotwire
warm your soul

HEATED TOWEL RAIL

FEATURES

- Built in timer
- Concealed wiring components included
- Hardwired or plugged in
- IP55

**Built in timer Included*

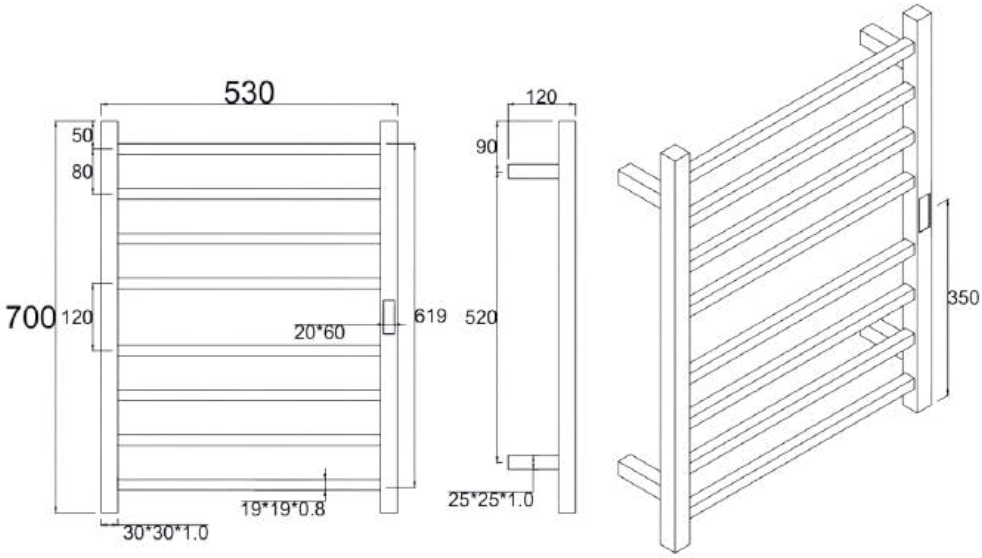

CODE	COLOUR	WATT	SIZE (MM)	NO. OF RAILS
FLAT SQ8 SS	Stainless Steel	80	(H)700 x (W)530 x (D)120	8
FLAT SQ8 BL	Matt Black	80	(H)700 x (W)530 x (D)120	8
FLAT SQ8 GM	Gun Metal	80	(H)700 x (W)530 x (D)120	8
FLAT SQ8 GL	Gold	80	(H)700 x (W)530 x (D)120	8
FLAT SQ8 BN	Brushed Nickel	80	(H)700 x (W)530 x (D)120	8

FREQUENTLY ASKED QUESTIONS

5	3	304	IP55	240V	CONCEALED WIRING
YEARS WARRANTY	YEARS COLOUR WARRANTY	HIGH-GRADE STAINLESS STEEL	SAFE FOR USE IN BATHROOMS	VOLTAGE SUPPLY	LEFT OR RIGHT HAND SIDE

Specs are a guideline. We are confident in the manufacturing of our product meeting our specs, However we recommend waiting for the rail before drilling holes in case of 1 or 2 mm differences. Specs can be used for rough in and timber supports without issue.